KASCO Abrasives
Coldwater, MI

T-11 FLARED CUPS

GENERAL

Type 11 flared cups have widespread applications in both rough grinding and tool room application.

Resin Bond – Rough Grinding

Resin bonded abrasives are a mixture of abrasive grains and glue like phenolic resins that are heat cured to a hard finish. Resin bonded abrasives are tougher and stronger than vitrified abrasives. Resin bonded flared cups are used for heavy stock removal with right angle grinders. Prime applications include foundry work, metal fabrication, and shipbuilding. They are also used in concrete surfacing.

Vitrified Bond – Precision Grinding

Vitrified bond abrasives are a mixture of abrasive grains and clays that are fired into a ceramic shape. Vitrified bond flared cups are typically used for tool sharpening.

This document deals with resin bond flared cups.

BASIC WHEEL IDENTIFICATION SYSTEM

All resin bonded flared cups are identified using the following basic measurements and information:

5/4 x 2 x 5/8-11 Type 11 A16-Q4B

- **A16-Q4B** – **Specification**
- **Type 11** – **Wheel Shape**
- **5/4 x 2 x 5/8-11** – **Wheel Size**

WHEEL SIZE

Wheel sizes are expressed by three measurements that are always expressed in the same order:

Diameter x Thickness x Arbor

6/4¾ x 2 x 5/8-11

- **5/8-11** – **Arbor size - diameter or thread size**
- **2** – **Wheel thickness - inches**
- **6/4¾** – **Wheel diameter - inches**

There are three common wheel diameters for flared cups. 4/3, 5/4, and 6/4¾. They are frequently called 4”, 5”, and 6” cups respectively. The wheel diameter is the measured as the (major diameter / minor diameter), i.e. 5”/4”.

Flared Cup Size Terminology

5/4 x 2 x 5/8-11

Major Diam/Minor Diam x Thickness x Arbor

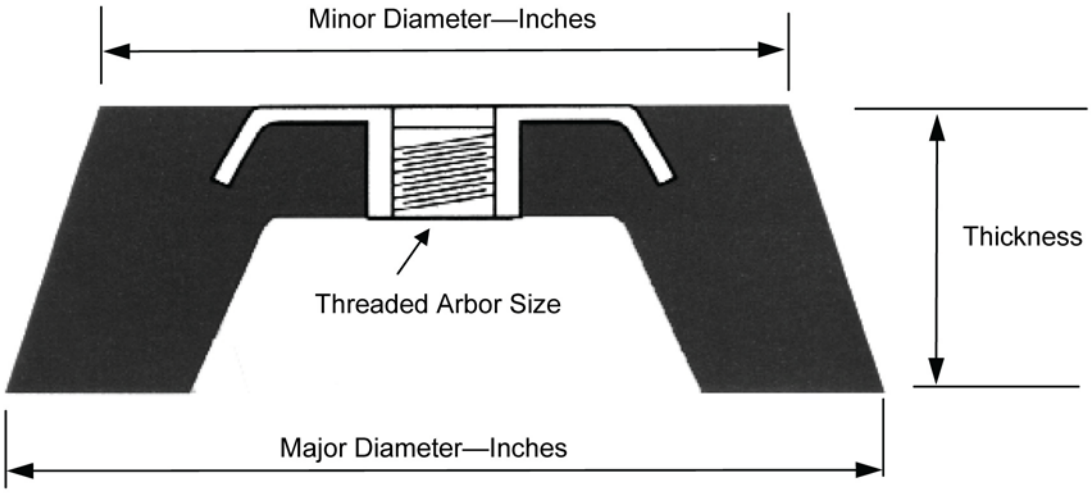

WHEEL SHAPES

STANDARD BACK FLARED CUPS

Standard back cups are the most widely sold. They have a steel plate approximately 2½" in diameter with fingers embedded into to cup. Welded to the plate is the threaded insert for the 5/8-11 arbor. There is a common misconception that standard back cups do not have a steel back.

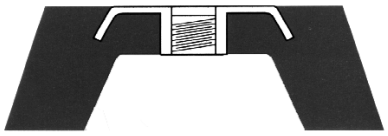

FULL BACK FLARED CUPS

The full back design is the same as the standard back except that the steel plate is extended over the outside top edge of cup. Some users believe that this provides an extra element of safety by acting as a tool guard. It is questionable if the full back provides significantly more protection that the standard back, and it no way eliminates the need for a fixed tool guard.

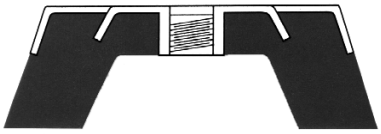

SPECIFICATION FORMAT

While specifications for resin bonded abrasives can vary significantly, there is a common outline that is present in most cases.

A 1 6 - Q 4 B

BOND TYPE
(B) for resin bonded, (V) for vitrified

BOND HARDNESS
A to Z indicating increasing hardness, for example "Q" is harder than "O". Most resin bonded products are in the "O" to "U" range of hardness. The sub-number usually indicates open or closed structure. 2 to 4 is dense, 5 to 9 is medium, and 10 or greater is open, all on a relative scale.

GRAIN SIZE
24, 36, 60 etc. The larger the number, the finer the grain size.

ABRASIVE GRAIN TYPE
(A) Aluminum oxide
(C) Silicon carbide
(CA) Silicon carbide & aluminum oxide combination
(NZ) Alumina zirconia

ABRASIVE GRAIN TYPES

ALUMINUM OXIDE is the primary metal grinding and cutting grain. It is a tough, durable grain that works well with most ferrous metals and stainless steels. Most T-11 cups are made with aluminum oxide for ferrous metal grinding.

SILICON CARBIDE is used primarily for masonry and nonferrous metal grinding grain. It is sharper than aluminum oxide, but is more brittle. All concrete and masonry cups are made with silicon carbide. It is also used to grind nonferrous metals like aluminum and some cast iron materials.

CA COMBINATION GRAIN is a mix of aluminum oxide and silicon carbide most commonly used for grinding cast and ductile iron materials. It offers the benefits of both grains, the toughness of aluminum oxide and the sharp cutting of silicon carbide.

ALUMINUM ZIRCONIA is a refracturing grain where the individual grain particles break during use to present new cutting edges. Alumina zirconia offers longer life and faster cutting on ferrous and stainless steels when compared to aluminum oxide. NZ cups are made with a mixture of the expensive alumina zirconia grain and standard aluminum oxide or silicon carbide grains. Specifications noted as NZC our becoming more common in foundries grinding cast iron. NZ specifications are usually mixtures of NZ and AO, and are used for grinding steel.

BOND TYPE

RESIN BOND uses phenolic resins to hold the abrasive grains in a shape. A mixture of abrasive grains and resins are pressed to shape, and then cured in ovens at a temperature of about 400 ^{o}F. Resin bonded wheels are tougher and stronger than vitrified, and used for offhand grinding (hand held tools) and all heavy duty applications.

VITRIFIED BOND uses natural clays to bind the abrasive grains into a ceramic bond. Vitrified wheels are fired at about 2,000 ^{o}F much like a pottery product. Wheels with this bond are typically used on stationary tools for precision grinding.

WHEEL HARDNESS

Hardness is the term that refers to how tightly the resin material hold on to the grain particles. A hard bond is one that is very strong and does not let the wheel breakdown quickly, thereby providing long wheel life. A soft bond is one that breaks down more quickly to expose new fresh grain particles to the work.
User must be aware that:

HARD WHEELS: *Last longer but may not cut fast or cleanly. They are generally used to cut or grind soft materials.*

SOFT WHEELS: *Grind fast and smooth, but do not last as long. They are generally used to cut or grind hard materials.*

Unfortunately users frequently want wheels that grind quickly and last forever. This is a difficult proposition, requiring compromise in the selection. It is also the reason most abrasive manufacturers offer a variety of hardness specifications in most products.

The hardness of the bond is expressed by a relative alphabetic scale with (A) being the softest, and (Z) being the hardest. Hardness numbers vary from one manufacturer to another, and the scale tends to be relative. Most resin bonded wheels have a hardness in the (O) to (U) range.

The selection of wheel hardness is directly related to the power of the tool. Low powered tools generally need soft wheels, while high powered tools require harder bonds.

SPEED RATINGS:

Wheel speed ratings in revolutions per minute (RPM) are based on both the safe limits of the wheel and the optimum grinding rate. Reinforced resin wheels frequently have a maximum allowable speed of 16,000 surface feet per minute (SFPM). Vitrified wheels always have a much lower allowable speed, usually no more than 9,500 SFPM. This is the speed that the edge of a new full diameter wheel moves past the work piece. To translate this into a RPM rating, we divide the allowable surface feet per minute by the wheel circumference (3.14 x diameter).

Maximum SFPM / Wheel Circumference (ft) = Maximum RPM

Abrasive wheels are designed to work best at speeds at or slightly below the maximum RPM. Higher or lower speeds will not enhance performance. Many wheels are operated at unsafe higher speeds under the misconception that they will cut faster. ***Under no circumstances should wheels be used with tools whose maximum speed exceeds the listed rating of the wheel. This also applies to tools that are governed or ad-***

justed to a lower speed. Do not allow the maximum rated speed of the tool to exceed the wheel rating.

WHEEL MOUNTING:

All abrasive wheels should be properly mounted per the manufacturer's instructions and ANSI B7.1 guidelines. T-11 flared cups require a fixed guard on the grinder.

NEW WHEEL BREAK-IN

It is a good practice that each time a new wheel is mounted on a tool to start it in a safety box. This is a steel box where the wheel can be brought up to speed and run for approximately 10 seconds. This recommended practice will minimize problems in the event a wheel was damaged in shipment or prior to being mounted on the tool. The safety box will contain flying pieces if the wheel fails due to crack.

It is also a suggested that each new wheel be given a brief break-in period of light use before applying full pressure.

TROUBLESHOOTING

When users complain of problems with resin bonded abrasives, they usually can be attributed to one of the following causes:

The wrong application for the wheel being used.

The operator is not using the product correctly.

The wheel is being used on a tool other than for which it was designed.

The wheel is being used on the proper tool, but one that is worn or defective.

The wheel is defective.

Wrong Applications

The most common problem with abrasives is the wrong product application . The use of grinding wheels that are too hard is frequently encountered. Operators want long wheel life, and tend to opt for harder wheels than they should be using. If the wheel is too hard for the material being cut or ground, it will generate excessive heat causing wheel distortion or chipping. Another common application problem is trying to use one wheel for every job. For example, silicon carbide abrasives are usually used on concrete/masonry materials and aluminum oxide on ferrous metals. Trying to use one wheel for both applications will result in poor results. Silicon carbide generally wears very fast on ferrous metals, while aluminum oxide glazes over on masonry. Using a grinding wheel designed for aluminum on stainless steel will not be satisfactory.

Operator Misuse

One of the most difficult problems to resolve is the misuse of abrasives by operators. Most operators are not receptive to being told that they are not using the product correctly. Some of the most common misuses encountered with cups are:

Operators using the spinning cup as a hammer to knock off slag.

Grinding on the outer edge of the cup.

Using cups on the wrong tool

All abrasive wheels are designed to be used on specific types of tools. The tool factors include: rotation speed, power, attachment means, and safety. Using cups on tools that with appreciably different operation conditions from the recommended can cause serious safety problems and poor performance. Some common examples are:

Using wheels at higher than recommended speeds is very dangerous, and usually results in poor performance due to accelerated wheel breakdown. With cups this is most common with pneumatic tools

Wheels designed for low power tools used on high power tools will breakdown to fast and not give adequate life. Conversely, high power wheels on lower power tools will usually be too hard and not grind well.

Defective Tools

A worn tool can make an abrasive wheel look like it is a poor or defective product. Some of the most frequently encountered problems include:

Bad bearings can cause excessive vibration or chattering.

A worn arbor shaft can cause the wheel to mount off-center.

Loss of power will cause the wheel to slow and not grind properly.

Defective Wheels

Defective abrasive wheels will occasionally be encountered. If after checking some of the above noted common application problems the wheel is still not performing properly, take it out of service and contact your manufacturer. Most abrasive manufacturers are sensitive to quality problems, and will quickly checkout the situation to resolve the problem. Before contacting the manufacturer, be certain that you have all of the pertinent facts about the wheel, tool, material, and operator technique.